Control Box with Door/Lid Switch and 120v or 240v Output - (240v coil version)

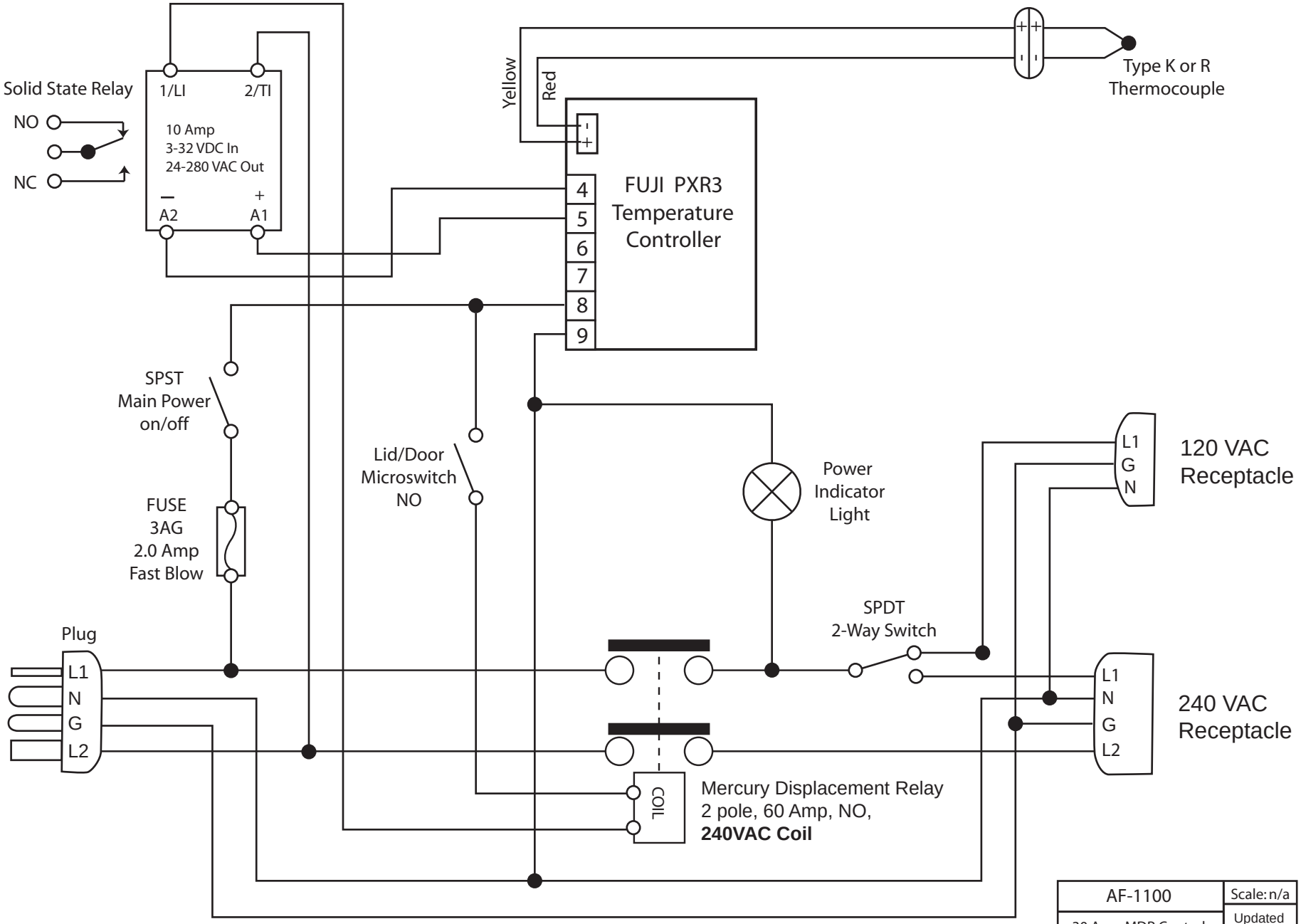

AF-1100	Scale: n/a
30 Amp MDR Control	Updated 3-31-2010
Drew Fritts	1 of 1